RP - Sanjiv Goenka Group

Growing Legacies

CESC LIMITED

Energising Lives • Since 1899

Smart Grid in Distribution System

Rajib Das
Dy GM, Planning
May 2019

About CESC Limited

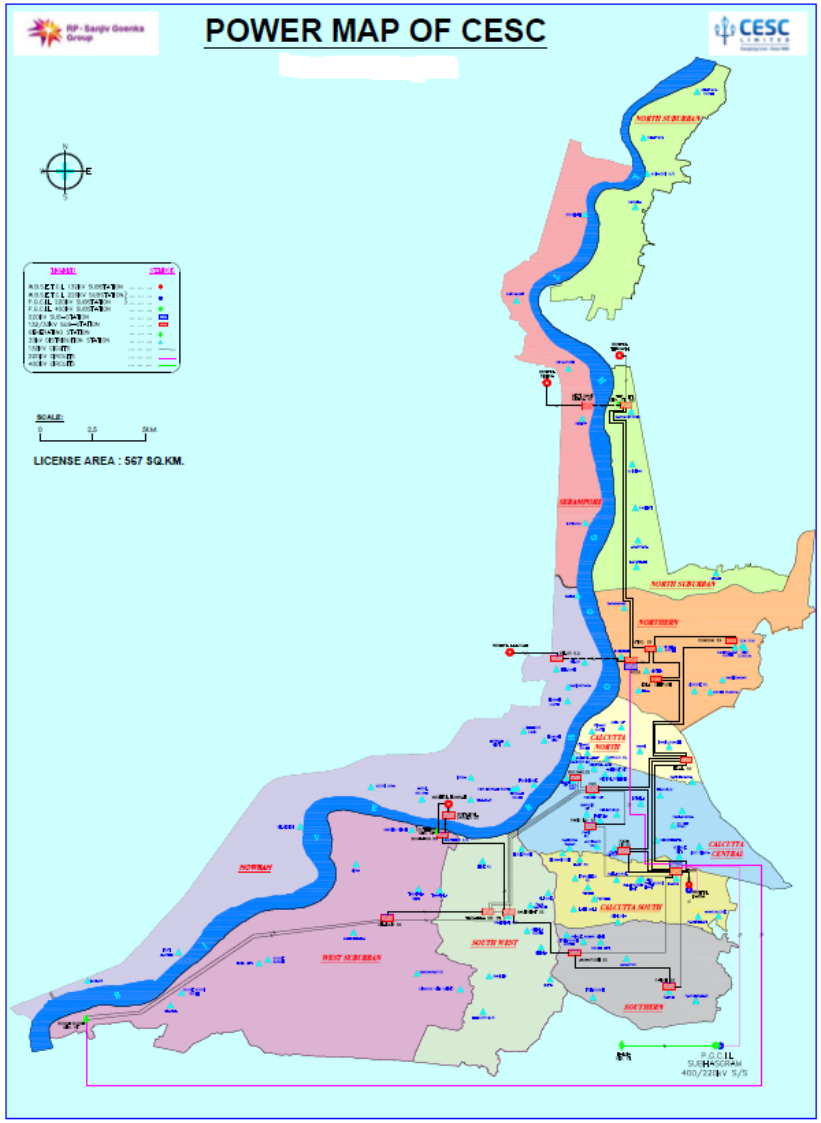

India's first fully integrated electrical utility, generating and distributing electrical power in Kolkata and Howrah **since 1899**.

Licensed Area: 567 Sq Kms

Generation Capacity: 1125 MW

Units Input (FY 18-19): 10800 MU

System Met: 2312 MW (recent)

HT Consumers: 1800
LT Consumers: 3.2 Million

Distribution Network

As on 31-3-2019

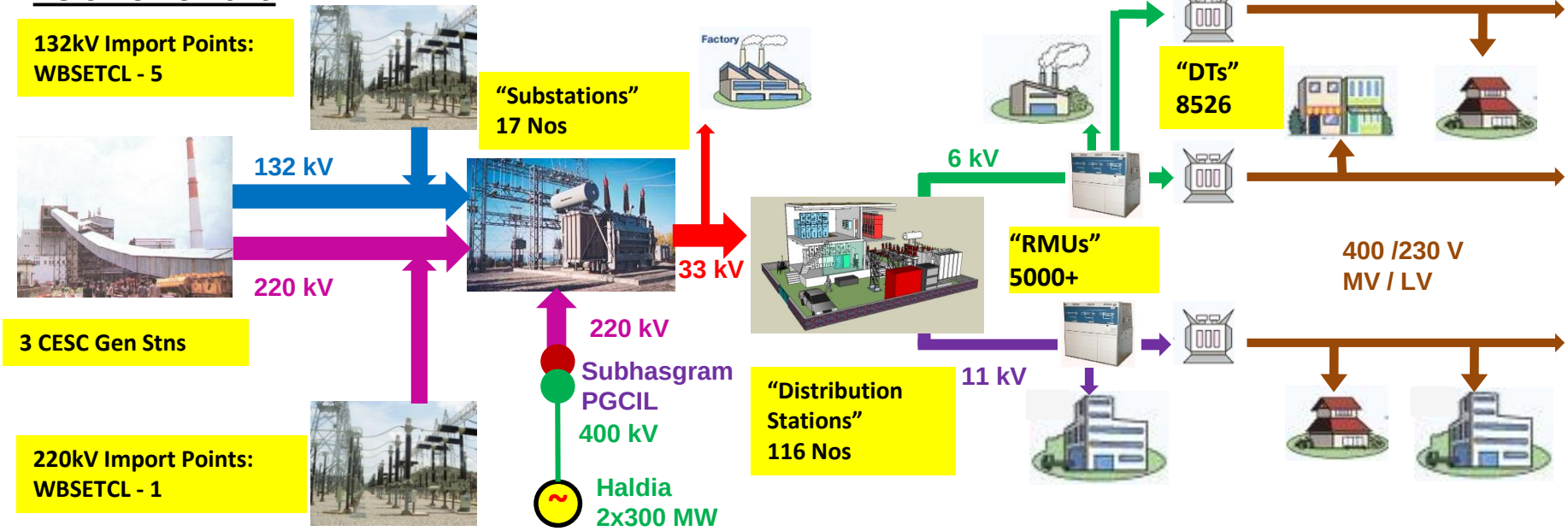

Generating Station	Installed Capacity
Budge Budge	750 MW
Southern	135 MW
Titagarh	240 MW
TOTAL	**1125 MW**
Haldia	**600 MW**

Distribution Assets	As on 31-3-14
Substation Capacity	3027 MVA
Distribution Station Capacity	3972 MVA
Distribution Transformer Capacity	2853 MVA
Lines: 220 kV, 132kV	658 ckm
Lines: 33 kV	1666 ckm
Lines: 11 kV & 6 kV	6881 ckm
MVAC Lines	13359 ckm

CESC LIMITED
Energising Lives · Since 1899

RP - Sanjiv Goenka Group

CESC EHV NETWORK

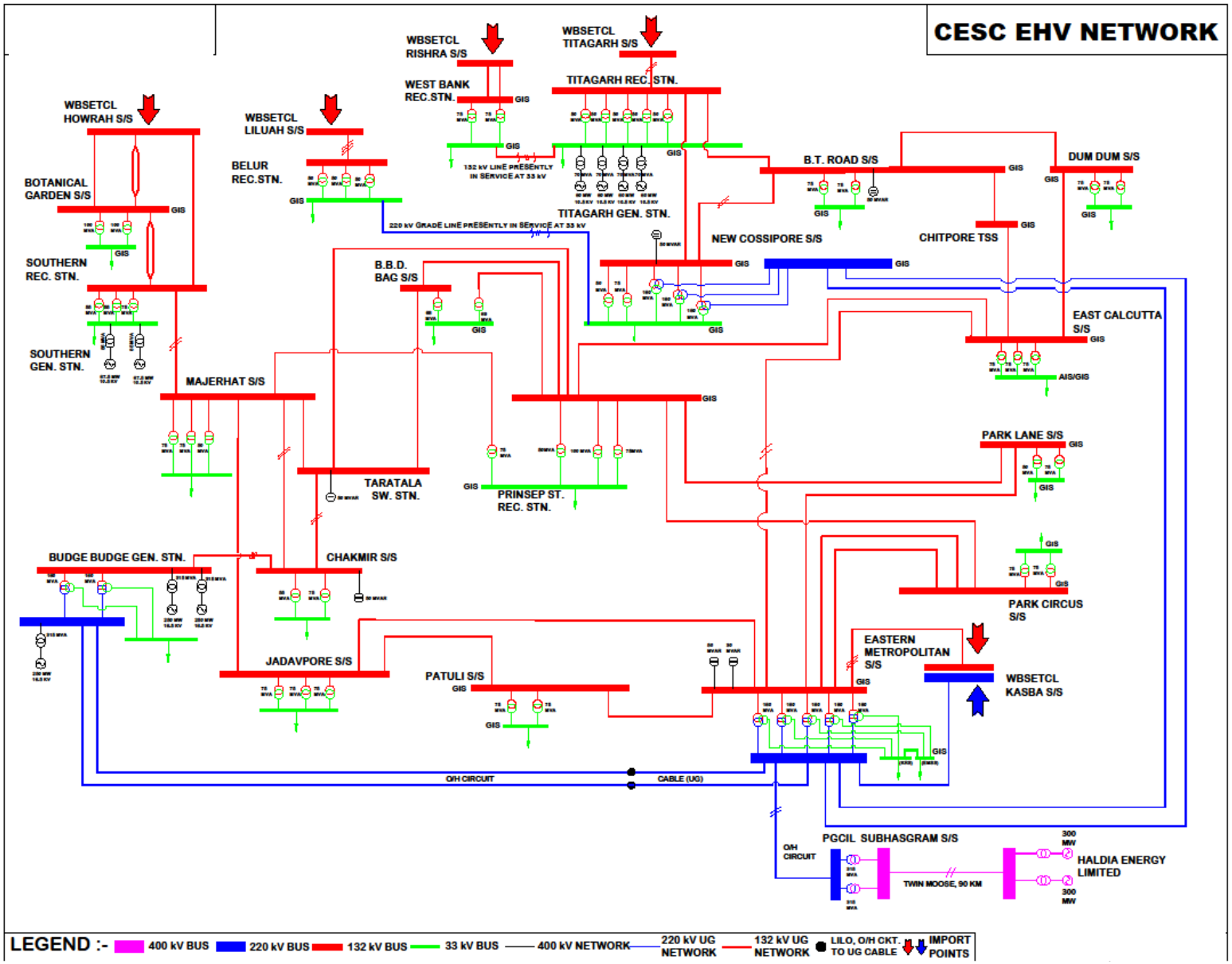

LEGEND :- 400 kV BUS | 220 kV BUS | 132 kV BUS | 33 kV BUS | 400 kV NETWORK | 220 kV UG NETWORK | 132 kV UG NETWORK | LILO, O/H CKT. TO UG CABLE | IMPORT POINTS

Energy flow diagram of CESC System

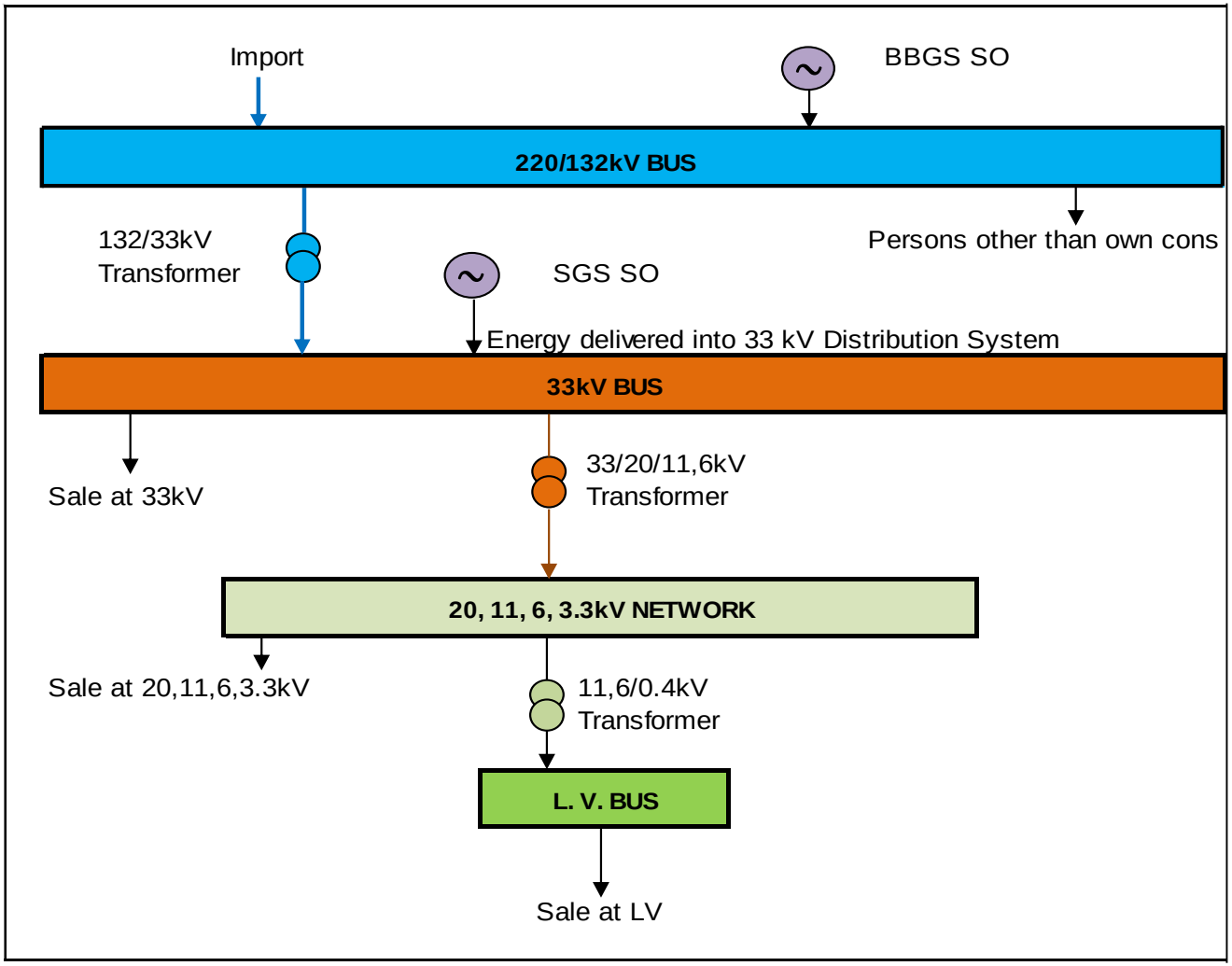

33kV Ring Main Cluster Network

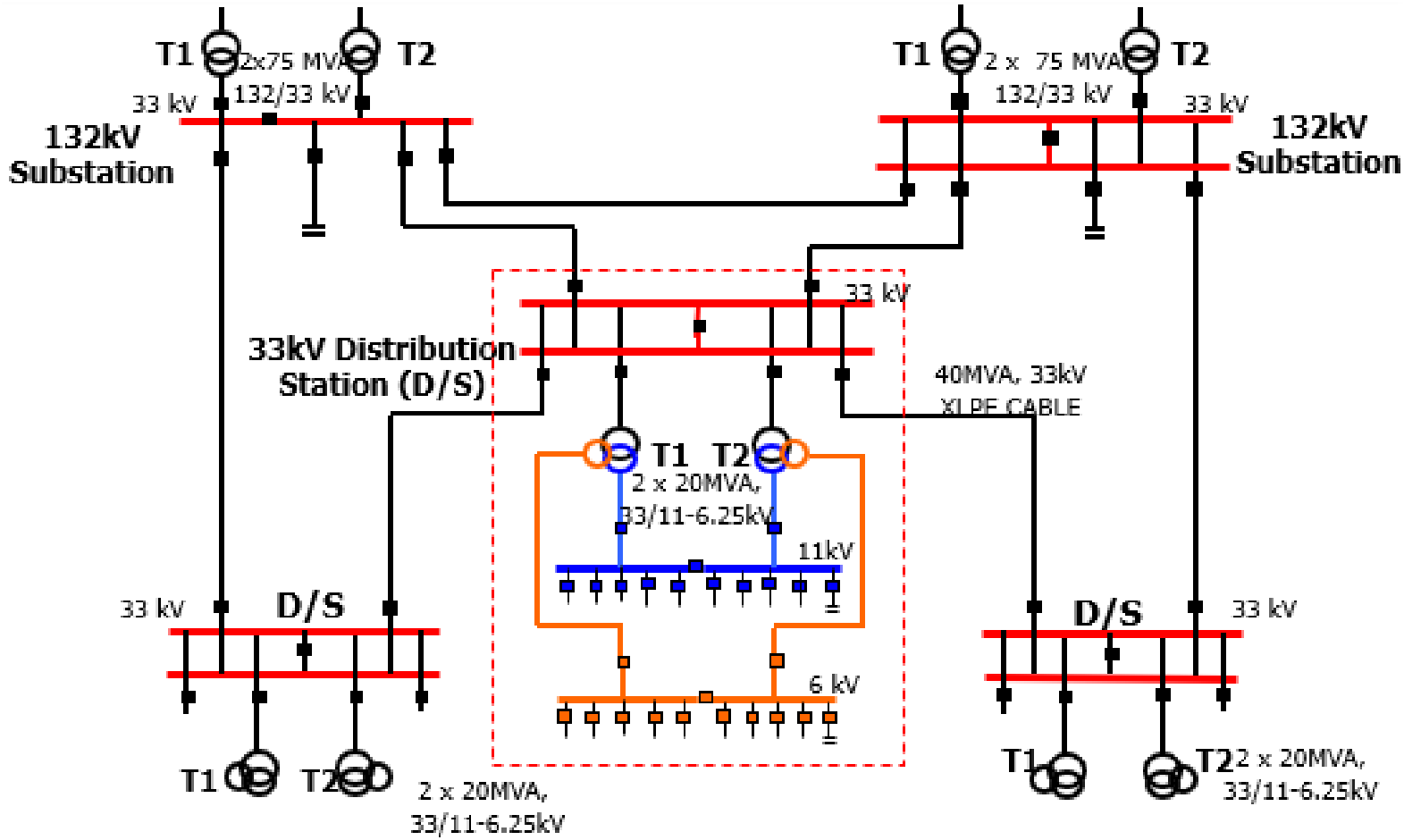

Distribution Plant & Equipment & DA

220 kV M/C Tower

132/ 33 kV S/S

Communications over Optical Fibres to these locations

132 kV GIS

33/11 - 6 kV Transformers

33 kV GIS

6 kV AIS

Communications over Wireless for these locations

RMU

DT

Meters

CESC – Evolution towards a Smart Grid

- **SCADA/EMS/DMS Systems**
  SCADA/EMS for EHV system; SCADA/DMS for HT distribution system; all Distribution Stations (116) are fitted with State-of-the-art SCADA System
- **Telecommunication infrastructure**
  OF/GPRS; RF installed; Technology trial done for PLC and Wifi
- **Feeder (RMU) Automation – OF based, wireless**
  470 nos. fully automated; 85 nos. semi automated
- **AMR/AMI**
  All HT and high value LT consumers are on AMR (> 10,000);
  AMI infrastructure installed Meters installed 10,000
  3000 Smart Meters on cellular
- **All DTRs are on AMR**
  All electrical parameters are stored and linked on GIS map
- **Street lights on AMR and Controller**
  14700 street light services on smart street light management system
- **GIS & GPS integrated consumer complaint management system**
- **More than 27 MW Solar PV Plants integrated with system under Net Metering arrangement**
- **Pilot (1.5 MW) Auto Demand Response Program implemented**

CESC Smart Grid Drivers

- **Reduction of distribution losses**
- **Stable 24x7 power supply to all categories of consumers**
- **Improvement in Power Quality**
- **Peak load management**
- **Reduction of infrastructure costs**
- **Reduction in O&M costs**
- **Reduction in power purchase cost**
- Readiness for ToU (Time of Use) Tariff
- Energy Efficiency Programs
- **Renewable integration**
- **EV penetration**
- **Storage accommodation**
- **Technology Adaptation**
- **Training & Capacity Building**
- **Customer Outreach & Participation**
- Sustainability Initiatives & Public Safety

Benefits of AMI

- Savings from cost of meter readers and support staff
- Reduction in wrong readings, premises locked situations, omissions etc.
- “Dead / defective” smart meters are now identified from remote quickly, without waiting for site inspections or consumer complaints and the billing on estimation period has shrunk
- Remote disconnection of defaulting customers will improve revenue collection and reduce receivables
- Remote surveillance on load pattern of consumers and identifying the appropriate tariff category
- Consumer indexation and energy audit being done for DTRs in the area
- Close monitoring on real-time data – proactive action is taken in case of supply outage, voltage variation, meter defects etc.

Demand Response program can be taken up using Smart Meters – but not done till date

Benefits of Distribution Automation

- 33kV network automation is done through SCADA and GIS / Switchgear installed at Substations
- RMU (6/11kV) Automation leads to faster identification, isolation and supply restoration
- Reduction in average restoration time means better customer service
  - ✓ Automation of RMU in Important installations- Hospitals , Pumping Stations , Govt. offices and other important installations - Average Restoration time is 1 min
- It provides safety to working personnel while doing switching operation in the network
- It provides network redundancy

Benefits of SCADA / EMS /DMS / OMS

- Visualisation of power system
- Real time monitoring
- Faster identification, isolation and supply restoration
- Reduction in average restoration time means better customer service
- It provides safety to working personnel while doing switching operation in the network
- Improved network planning at reduced cost
- It provides network redundancy
- Scheduling of power
- Merit based power procurement from embedded generating stations and outside

Distribution is the Key

National Electricity Policy:

"Distribution is the most critical segment of the electricity business chain"

National Tariff Policy:

"Making the distribution segment of the industry efficient and solvent is the key to success of power sector reforms"

Outage Management

HT Command Station

Operating Engineer placed at HT Command Stations (5 nos.) located across licensed area engaged in round the clock operation

Separate desk for HT consumers

There is separate desk at Central Control Room for communication with HT consumers

LT Control Room

There are 10 districts for development and operation of LT network.

LT Control Room acts as a value added layer over the 10 Regional Reporting Centres (RRC) at districts

Monitoring of exceptional customer calls

Proactive Outage Management for critical & sensitive Installation

Monitoring of repetitive customer complaints

Ensuring faster restoration of customer calls using GPS aided 'Vehicle Tracking' System and Crew Management System

Monitoring supply restoration in LT faults complying with the internal benchmark (stiffer than regulatory norms)

Other initiatives

- Replacement of old Pillar Boxes with Re-wirable fuses by Pillar Boxes with HRC fuses for reduction of fusing, ensuring safety, reduction in loss
- Installation of MCB/MCCBs at consumer service points for faster restoration, ensuring safety
- Installation of Automatic Power Factor Controllers at secondary side of distribution transformers for improving voltage profile and better utilisation of DTR capacity
- Condition based Monitoring (predictive maintenance) of T&D equipment for reducing forced outages and effective utilization of asset

Trends in Average Restoration Time

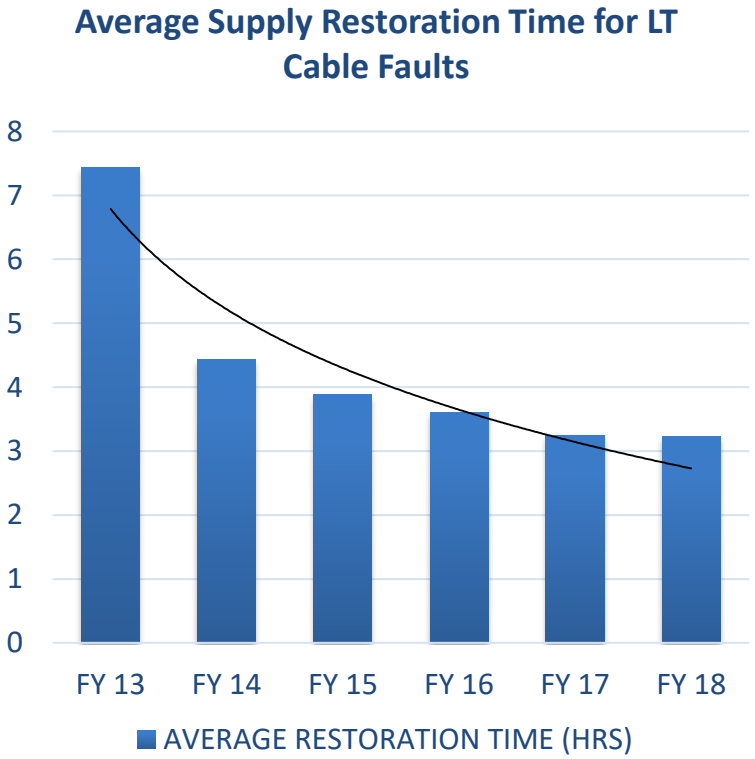

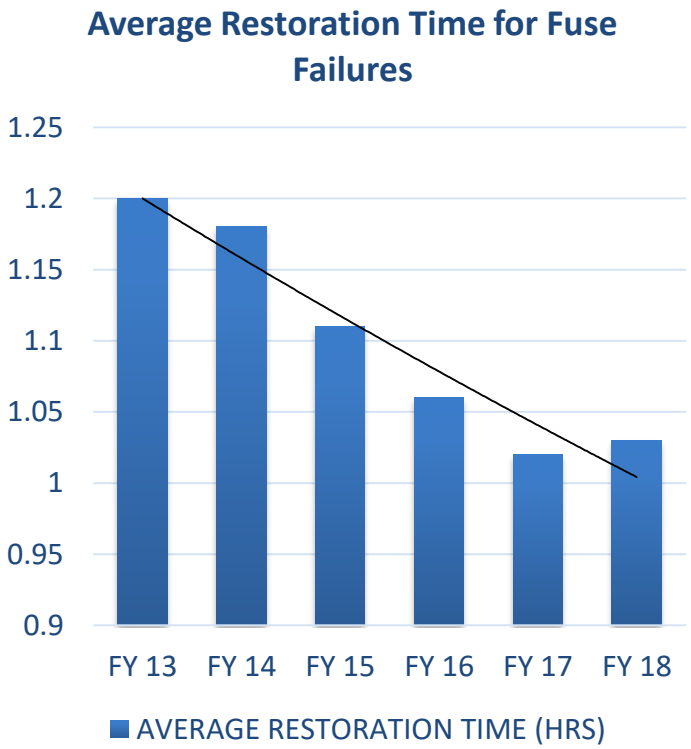

DTR load management – No. of Failures

- AMR in DTR replaces manual system of load reading
- 24x7 data logging of DTR loading
- DTR load data integrated with GIS
- Load management based on real time data
- Generate exception reports
- Better asset management
- DTR Failure Rate – 0.40%

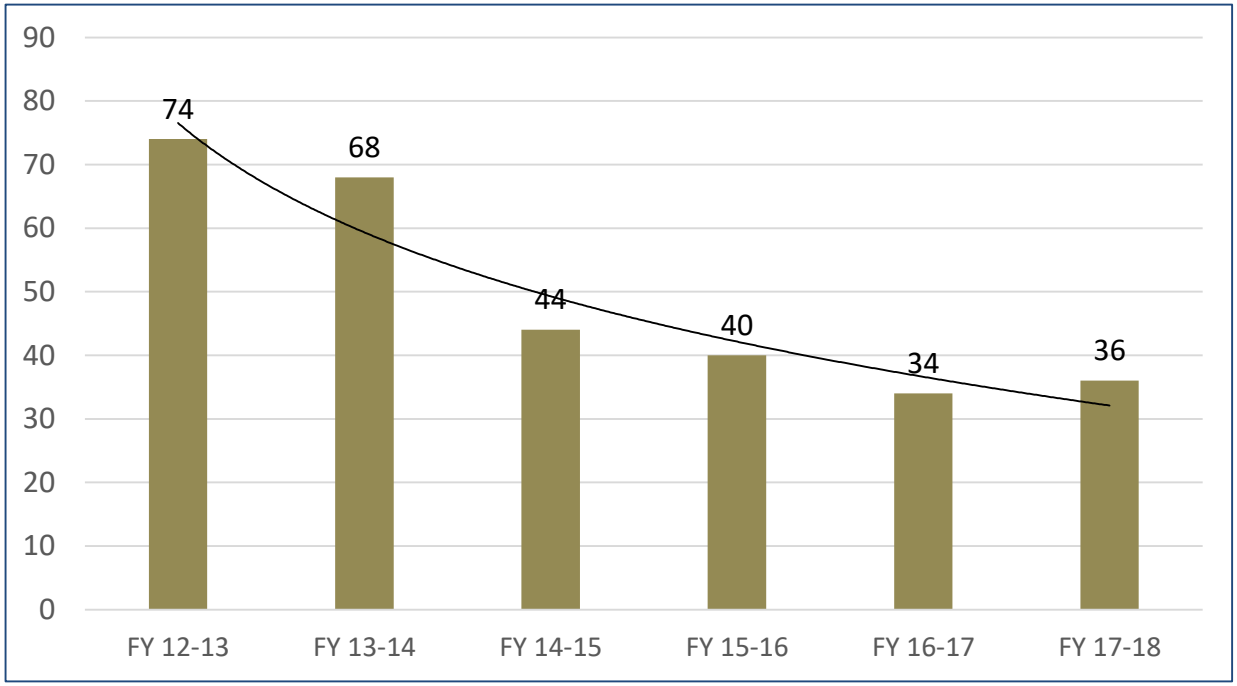

More than 50% reduction w.r.t. FY 12-13

Voltage complaints

Consumer base

29.2 lakhs 14-15

30.2 lakhs 15-16

31.2 lakhs 16-17

32.2 lakhs 17-18

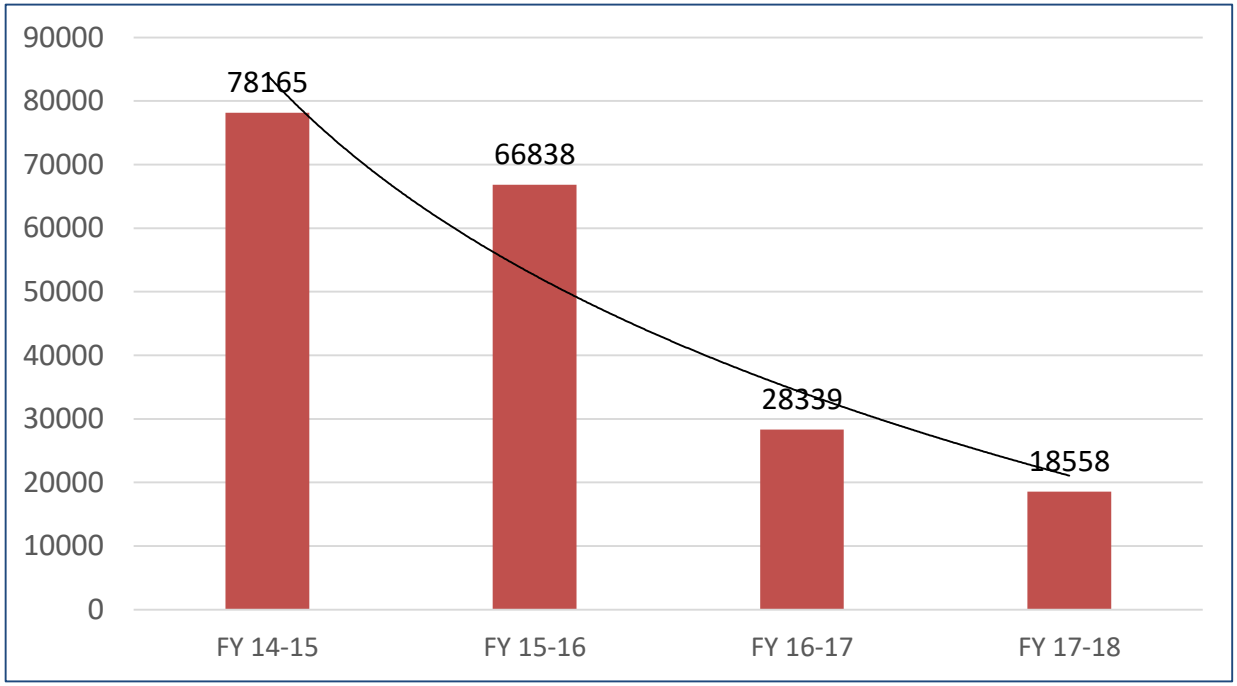

More than 75% reduction w.r.t. FY 14-15

New Connections

New Connection in 1 day

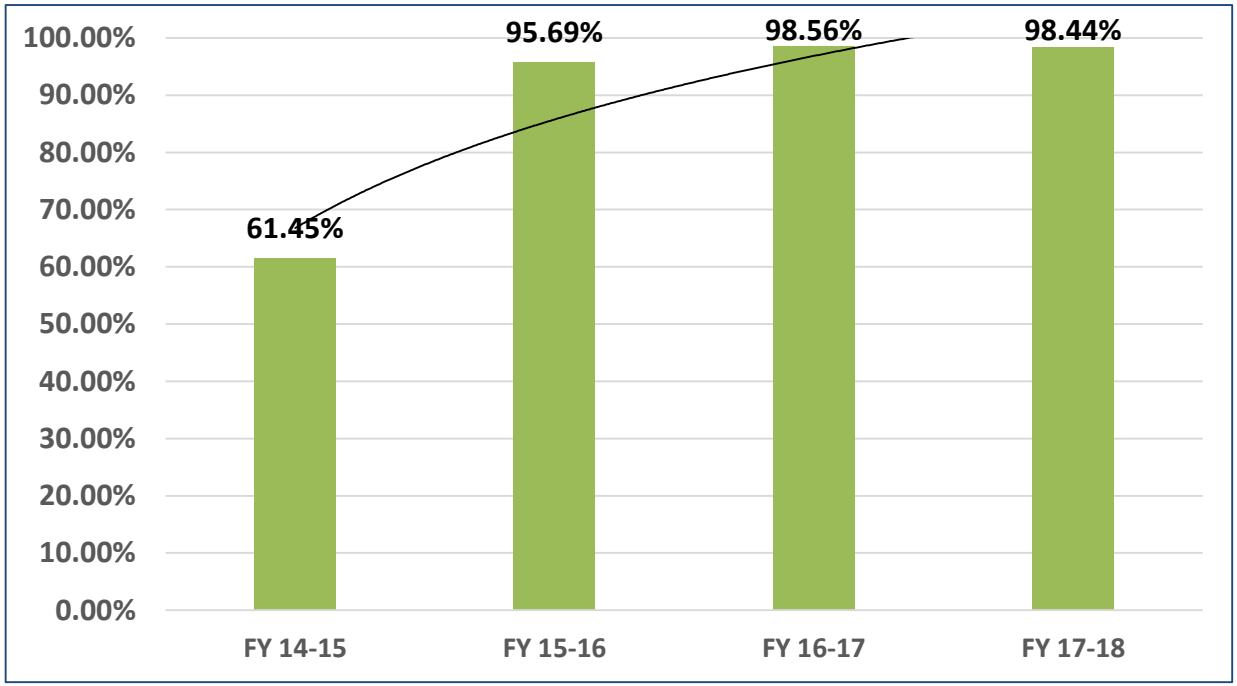

Almost all inspection are done (98%) within 3 days of application

Future Plan

RP - Sanjiv Goenka Group

New Activities being executed / under plan:-

- Upgradation of SCADA / EMS / DMS / OMS
- GIS with consumer indexing
- Demand Response
- EVCS – few already installed
- Storage – under study

Costs and Reliability

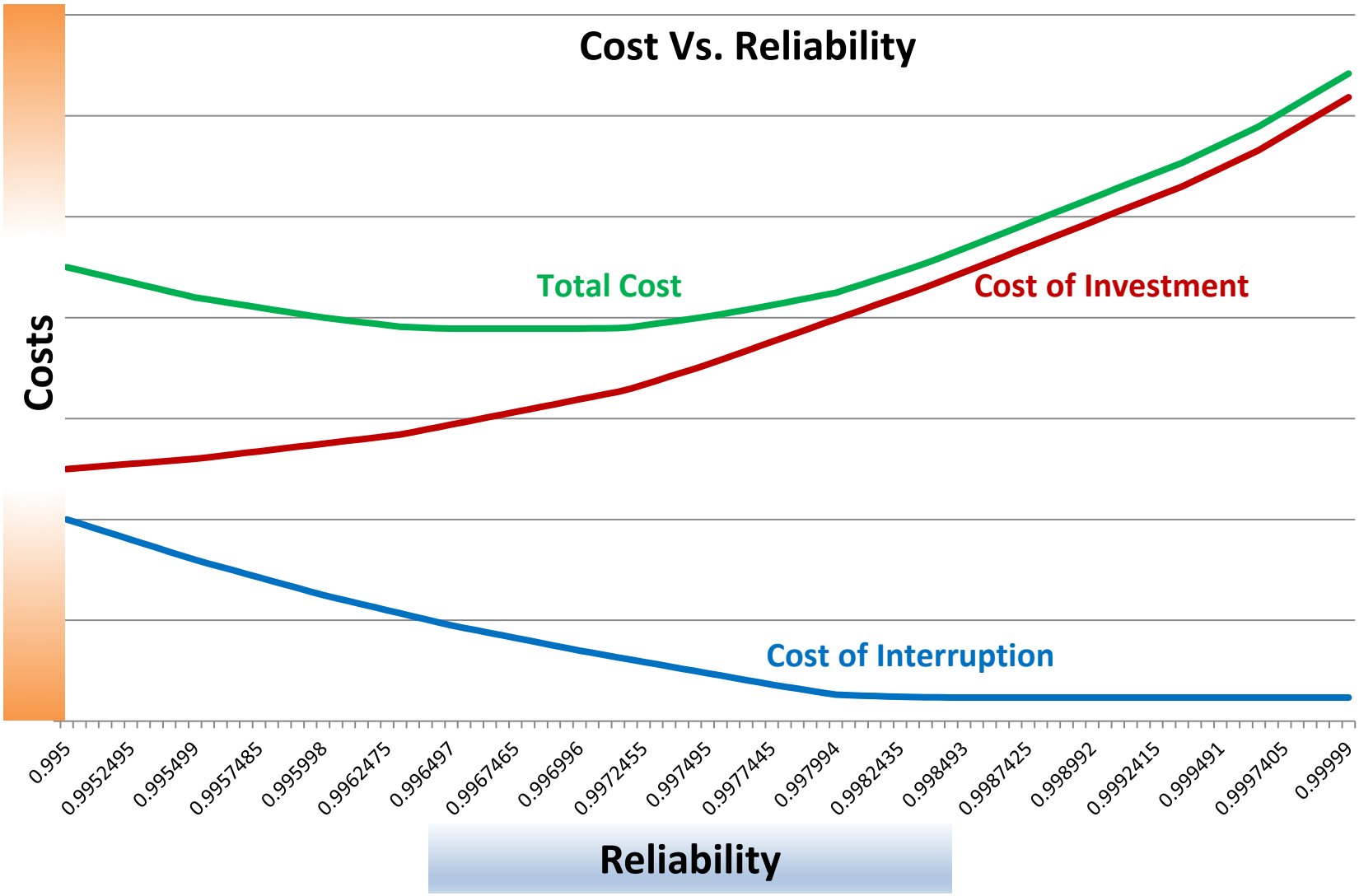

RP - Sanjiv Goenka Group

CESC LIMITED
Energising Lives - Since 1899

THANK YOU

rajib.das@rp-sg.in